LORAWAN® CONVERTER

M-BUS-1

USER MANUAL

DOCUMENT REVISION	FIRMWARE VERSION
17	2.0 and higher

CONTENTS

INTRODUCTION 4
1 DEVICE PURPOSE AND OPERATION PRINCIPAL 5
Device Purpose 5
Operation Algorithm 5
Functional 6
Marking 7
2 SPECIFICATION 8
Device Specification 8
Default Device Settings 9
3 OPERATION 10
Device Appearance 10
Contacts Description 12
LED Indications 14
Mounting Recomendations 15
Converter operation in the independent poll mode 17
Converter operation in the transparent mode 17
Converter operation in the universal poll mode 18
4 COMMUNICATION PROTOCOL – 1.1 VERSION 21
Converter M-BUS-1 transmits the following types of packets 21
1. Packet with current readings from connected heat meter 21
2. Packet with data from connected M-BUS device 22
3. Packet with data about external power 22
4. «Alarm» packet 22
5. Packet with data about state changes of the outputs OUT_1 or OUT_2 23
6. Packet with time correction request 23
7. Settings packet 23
Converter M-BUS-1 receives packets of the following types 25
1. Real-time clock adjustment 25
2. Query of readings log 25

3. Output on command 25
4. Converter operation in transparent mode 26
5. Output off command 26
6. Packet with request of settings 26
7. Packet with settings is identical to such packet from device 27
5 IMPORTANT SAFETY INSTRUCTIONS 29
General Recommendations 29
Electrical Safety 29
Battery Safety Instructions 30
Safety Instructions In Case Of Damaged Housing 31
Emission Information 31
Solving Common Problems 31
6 STORAGE AND TRANSPORTATION REQUIREMENTS 32
7 CONTENT OF THE PACKAGE 33
8 WARRANTY 34

INTRODUCTION

This manual is designated for M-BUS-1 device (hereinafter – device, converter) manufactured by Vega-Absolute OOO and provides information on powering and activation procedure, control commands and functions of the device.

This manual is targeted at specialists familiar with installation work fundamentals for electronic and electrical equipment.

It is forbidden to use the device in case of any malfunctions.
In the event of malfunction, please contact technical support of the manufacturer

To prevent possible personal injury and/or equipment damage, it is strongly recommended to read the «Important safety instructions».

Vega-Absolute OOO reserves the right to make changes to the manual related to the improvement of equipment and software, as well as to eliminate typos and inaccuracies, without prior notice.

This product is intended for separate collection at an appropriate collection point. Do not dispose of the product with household waste.
For details, please contact your dealer or your local recycling organization.
We encourage users to return products for recycling.

1 DEVICE PURPOSE AND OPERATION PRINCIPAL

DEVICE PURPOSE

The device M-BUS-1 is designed for reading of values from metering instruments via M-BUS interface and further accumulating and transmitting of this data to the LoRaWAN® network. M-BUS-1 has two 'open-drain' outputs so it can be used as a control device. Also, device has two security inputs.

Converter M-BUS-1 may operate in two modes. Converter can be used for any utilities' meters and industrial equipment with M-BUS interface while it operates in the transparent mode. But in the independent poll mode of the metering devices converter can be used only with the next supported devices:

- Heat meter "Teplouchet-1"
- Heat meter "STE 21 "Berill"
- Heat meter "ELF-M Teplovodomer"
- Heat meter "Landis Gyr T230"
- Heat meter "Sharky 775"
- Heat meter "Pulsar"
- Heat meter "Calec ST II"
- Heat meter "Calec ST II_2"
- Heat meter "Sensonic II"
- Heat calculator "ZENNER_MULTIDATA_WR3"
- Heat meter "Pulse STK-15"
- Heat meter "Hiterm PUTM-1"

The converter is powered by a 6400 mAh built-in battery. The converter can be powered by the 10...36 V external power supply.

Quantity of connecting M-BUS devices to the converter is up to 10 at the same time.

Starting with firmware version 2.0 and higher, M-BUS-1 supports simultaneous connection of metering devices of different models and manufacturers

OPERATION ALGORITHM

Vega M-BUS-1 operates in modes listed below:

"Storage" – is a mode for storing and transporting. In this mode the device does not communicate regularly with the network.

"Active" – is a main mode of device operation.

Before start using you need to switch the device out of "Storage" mode.

Vega M-BUS-1 supports two activation methods in the LoRaWAN® network - ABP and OTAA. Select one of the methods via the “Vega LoRaWAN Configurator” application (see “User Manual” on the program).

ABP method. After pressing the start button, the device immediately starts working in the "Active" mode.

OTAA method. After pressing the start button, the device makes three attempts to connect to the network within the set frequency plan. After the activation in the LoRaWAN® network is confirmed, the device sends a signal (LED flashing for 5 seconds) and switches to the "Active" mode. If all attempts fail, the counter will continue to accumulate data and will attempt to connect to the network every 6 hours.

Hold the start button pressed (min. 5 seconds) to switch the device from the "Active" mode back to the "Storage" mode without turning off the power (battery or external).

The readings are collecting from the meter with a configurable period from 5 minutes to 24 hours. The readings stored in the device memory and transmitting during the next communication session with the LoRaWAN® network.

The readings are read from the connected device at 00.00 on the internal clock of the device if the data collection period is set to 24 hours, at 00.00 and at 12.00, if the period is 12 hours and so on.

The adjustable data transfer period can be from 5 minutes to 24 hours. Data transferring in random point in time during set period. At the next communication session, the device starts sending accumulated packets with readings, from the earliest to the latest.

With the "Confirmed uplinks" option turned on, the device will send the next packet only after receiving a confirmation of the delivery of the previous one. If such confirmation has not received after the fulfilled in the settings uplink number of transmissions, device completes the communication session until the next one according to the schedule. In this case, the device continues to collect data according to the data collection period and store it in memory. Non-transmitted packets are remained in the device memory until the next communication session.

With the "Confirmed uplinks" option turned off, the device just sends all accumulated packets to the network in order from the earliest to the latest. There are no checks of package delivery in this mode. After communication session there are no non-transmitted messages in the device memory.

The internal clock is set automatically when device connected to the "Vega LoRaWAN Configurator" through USB, also can be adjust via LoRaWAN® network.

FUNCTIONAL

M-BUS-1 converter can either be of class A or class C (LoRaWAN® classification) and has the following features:

- Automatic change from A class to C class when powered from an external power supply
- ADR support (Adaptive Data Rate)
- Sending of confirmed packets (configurable)
- Extra communication in case of security inputs actuation
- Temperature measurement by the internal temperature sensor
- Charge measuring of the built-in battery (%)

MARKING

Device marked with sticker which contains the next information:

- Device model;
- DevEUI;
- Month and year of manufacture.

Sticker is located in three places – on device case, in factory certificate and on the packing box.

Besides, there is an additional sticker located on the packing box which contains:

- Information about firmware version;
- QR-code containing DevEUI and other keys for device registration.

2 SPECIFICATION

DEVICE SPECIFICATION

MAIN	
M-BUS interface	1
Quantity of connecting M-BUS devices	up to 10
Security inputs	2
'Open-drain' outputs	2
USB-port	mini-USB, type B
Operating temperatures	-40...+85 °C
LORAWAN®	
LoRaWAN® class	A or C
Quantity of LoRa channels	16
Frequency plans supported by default	RU868, EU868, KZ865, custom (EU868 based)
Frequency plans available as order option	IN865, AS923, AU915, KR920, US915
Activation type	ABP or OTAA
Communication period	5, 15, 30 minutes, 1, 6, 12 or 24 hours
Data collection period	5, 15, 30 minutes, 1, 6, 12 or 24 hours
Memory amount for storing packets	100 packets
Antenna connector	SMA
Sensitivity	-138 dBm
Radio coverage in restrained urban conditions	max 5 km
Radio coverage within line of sight	max 15 km
Transmitter power by default	25 mW (configurable)
POWER	
Built-in battery	ER 18505M 6400 mAh 3.6V
External power supply	10...36 V
Calculated number of packets sent by the device with default settings	30 000
CASE	
Housing dimensions	93 x 78 x 66 mm
Ingress protection rating	IP65
Mounting	clamp fastening to the support, DIN-rail, wall-mounting
PACKAGE	
Dimensions	140 x 80 x 85 mm
Weight	0.271 kg

DEFAULT DEVICE SETTINGS

PARAMETER	VALUE
Frequency plan	RU868
Activation type	OTAA
Adaptive Data Rate	ON
Confirmed Uplinks	OFF
Rx 1 Delay	1 second
Join Accept Delay	5 seconds
Uplink number of transmissions	1
Data rate	DR0
Power	14 dBm
Communication period	24 hours
Data collection period	24 hours
Time zone	UTC +00:00

For changing the device settings, you need to connect to it with "Vega LoRaWAN Configurator" application. You can download app on the iotvega.com site in SOFT section as well as User Manual for configurator. Go to the app page.

3 OPERATION

DEVICE APPEARANCE

Vega M-BUS-1 is represented in black plastic case which has six screws and mounting for DIN-rail. The device case is equipped with a hermetic gland of M12 size. A sealant is installed inside the gland, ensuring compliance with the declared Ingress Protection rating of the device case.

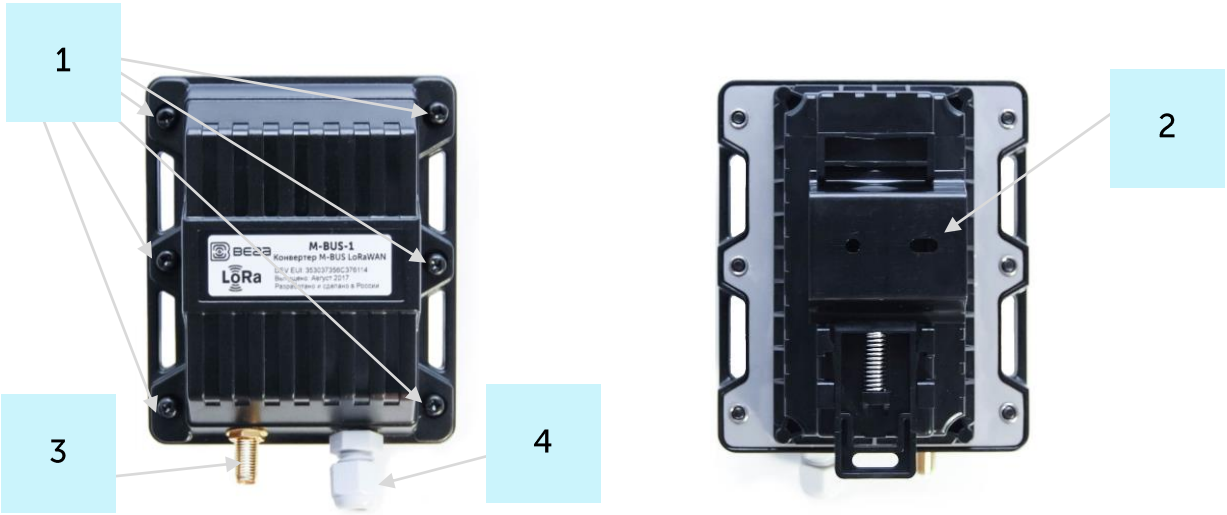

1 – screws ø 3 mm x 16 mm, cross ✚

2 – DIN-rail with mounting holes ø 3 mm

3 – input of external antenna

4 – cable gland of M12 size for installing the cables and wires with circular cross-section with a diameter of 5...6 mm.

Internal structure of cable gland

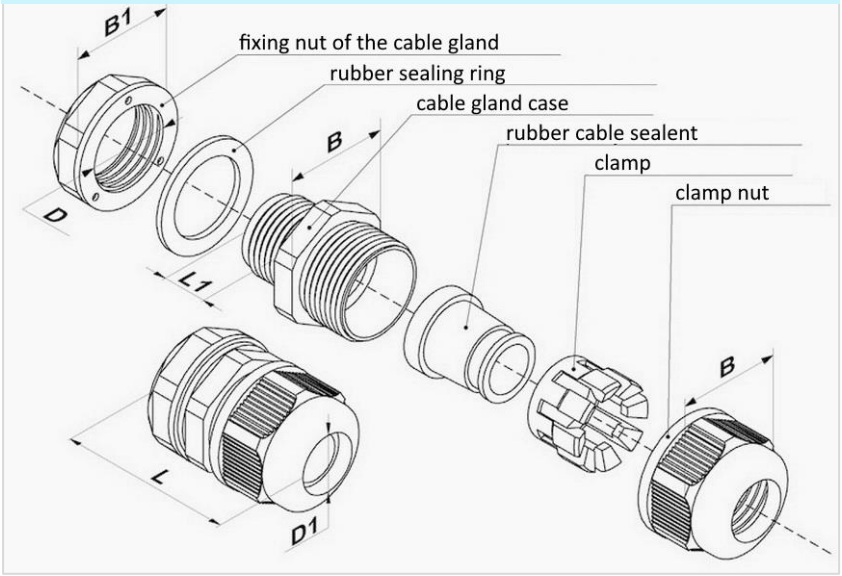

All of elements for manage and indication as well as connecting contacts are placed on the board inside the case.

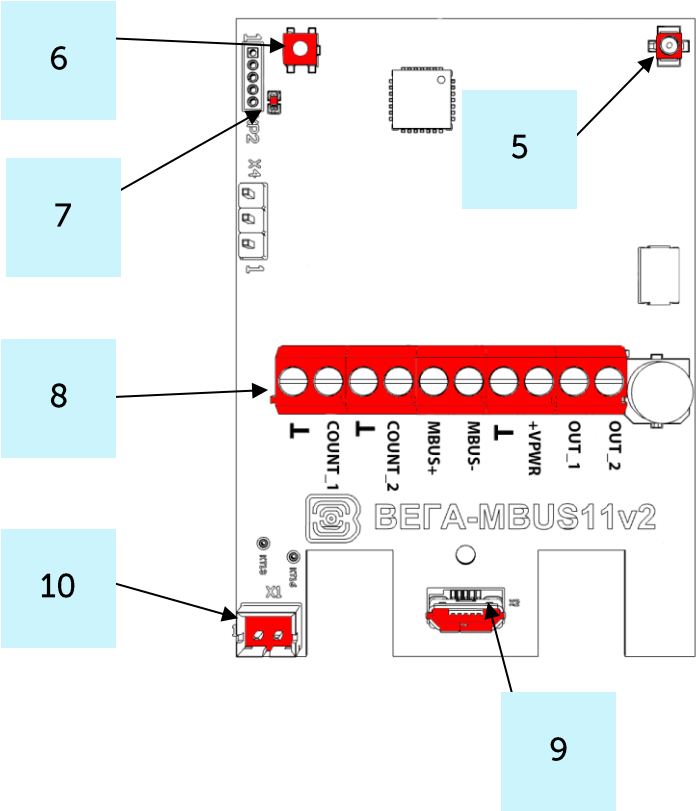

5 – input for connecting an external antenna

6 – start button

7 – LED indicator

8 – contacts

9 – USB-port

10 – connector for battery

CONTACTS DESCRIPTION

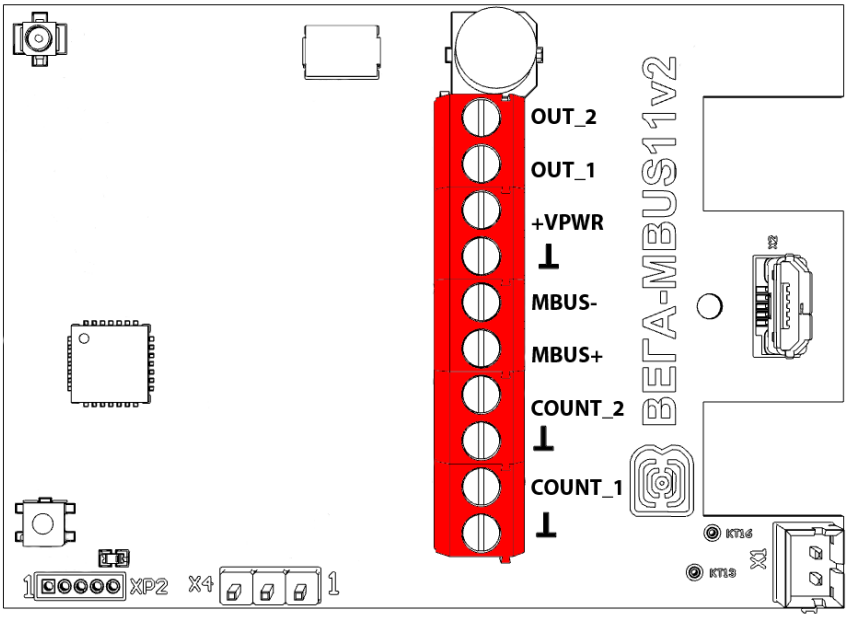

Converter has 10 contacts, see table below:

Contact	Designation on the board	Description
1	OUT_2	Open-drain output 2
2	OUT_1	Open-drain output 1
3	+VPWR	Power +
4	⊥	Power -
5	MBUS-	M-BUS -
6	MBUS+	M-BUS +
7	COUNT_2	Security input 2
8	⊥	Ground
9	COUNT_1	Security input 1
10	⊥	Ground

Ground contacts 8 and 10 are used for connection of security inputs COUNT_1 and COUNT_2.

Security inputs of the M-BUS-1 device are used to connect circuits with the following types of NO contacts:

- reed switch;
- mechanical pushbutton;
- open-collector output.

While security input connected the device monitors its closure. Should the security input triggering, the device is activated and sends an alarm message to the network.

For connecting an external metering device contacts MBUS+ и MBUS- are used.

To increase the battery life, the physical level of the M-BUS interface is switch on (supply voltage is applied to the outputs MBUS+, MBUS-) just before meter polling with a programmable delay (the delay value is depending on the type of connected meter). The delay is introduced for initializing own meter interface and its preparing for receiving data from the converter. When the polling is complete, the physical M-BUS level is turned off.

When the converter is in class C, the physical level of the M-BUS interface is constantly on and does not turn off after completing a poll.

The outputs OUT_1 and OUT_2 operate on the principle of open-drain and can be used to control external devices, such as electric cranes, lighting, sirens and so on. The load capacity of each output is no more than 200 mA.

Permissible load for each digital output is 200 mA

To increase the load on the device outputs, it is necessary to use an external relay. The relay connection scheme is shown below.

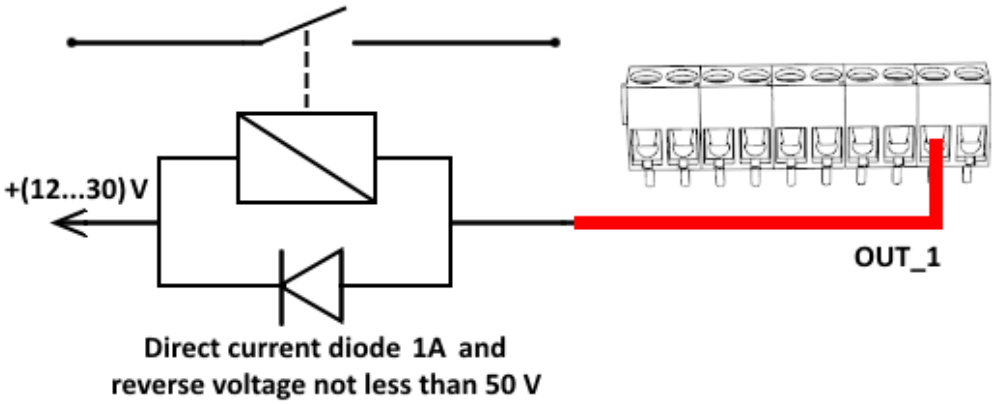

LED INDICATIONS

There is a one red LED on the board. The indication is only used when the device is activated in the LoRaWAN® network and when the operating modes are changed.

LED on the board

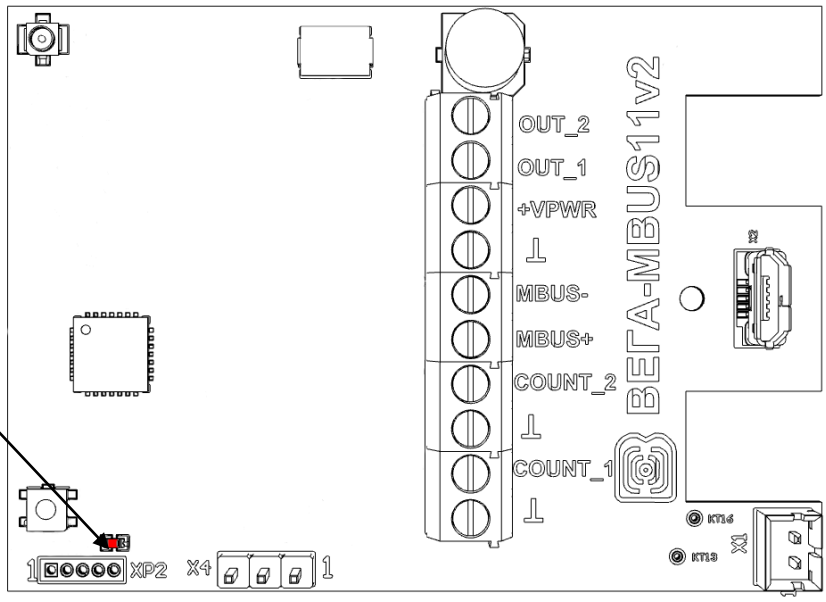

LED SIGNAL		MEANING
	Short flashings	Linking to the network in progress
	One long flashing during 5 sec	The device has been successfully connected to the network and is in active mode
	Three flashings each by 1 sec	Linking to the network has been failed or the device switched to the “Storage” mode

In case of connection attempt fail, the device will continue to accumulate data and will attempt to connect to the network every 6 hours

MOUNTING RECOMENDATIONS

To provide the stable radio between the gateway and the end device it is recommended avoiding the device installation in the places which are barriers for the radio signal getting through like a reinforced floors and walls, a basement, an underground facilities and wells, a metal case etc.

The necessary stage for the network deploying including a big quantity of end devices is a radio planning work with nature experiments.

When determining the installation location of the device, it is recommended to mount the devices on vertical surfaces at a level not exceeding 1.5 meters. For installation, it is recommended to use a double mount, which is a combination of a DIN rail and ties.

The device must be installed no closer than 20 cm from the workplace and places of permanent residence of people.

The device is sensitive to static electricity!
When opening the case and any manipulations with the board, it is necessary to use electrostatic gloves to avoid damage to the board parts by electrostatic discharges

For mounting you will need:

- cross-shaped screwdriver ✚;
- wire stripper;
- laptop.

Step by step mounting be like:

1. Setting the devices and connecting them to the network are usually carried out in the office (see Network Deployment Manual).
2. Determination of suitable places for mounting at the object with a network tester.
3. De-energizing the connected equipment, metering devices, etc.
4. Placement the wires in the cable gland. It must be remembered that the wires must be united in one cable of circular cross-section with diameter of 5...6 mm.

Inside the cable gland there is a sealant ensuring compliance with the declared Ingress Protection rating of the device case. When removing the sealant, as well as when installing wires of a different diameter or cross-section, device performance may deteriorate until failure due to moisture entering the case

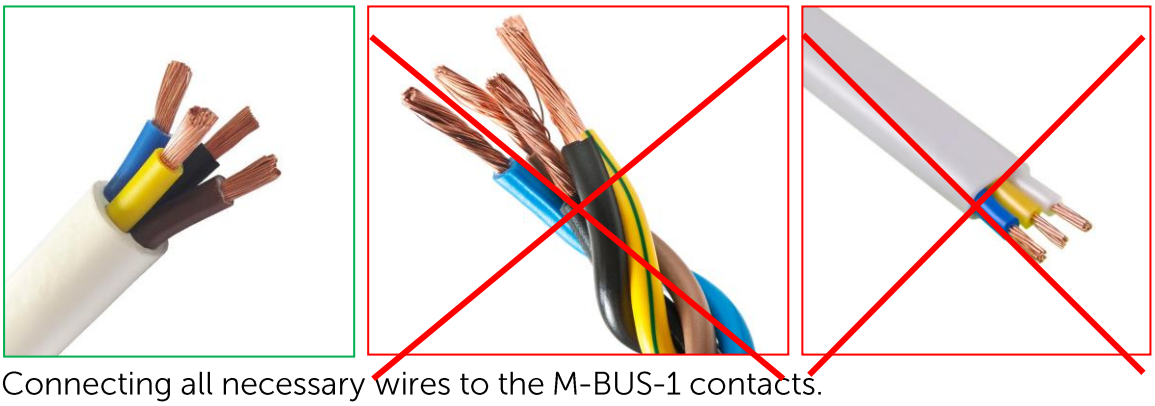

5. Connecting all necessary wires to the M-BUS-1 contacts.
6. M-BUS-1 converter can be powered from an external power source as well as from a battery. For working with battery, it is necessary to connect it to battery connector on the board. For working with external power source you should use the contacts +VPWR and ⊥.

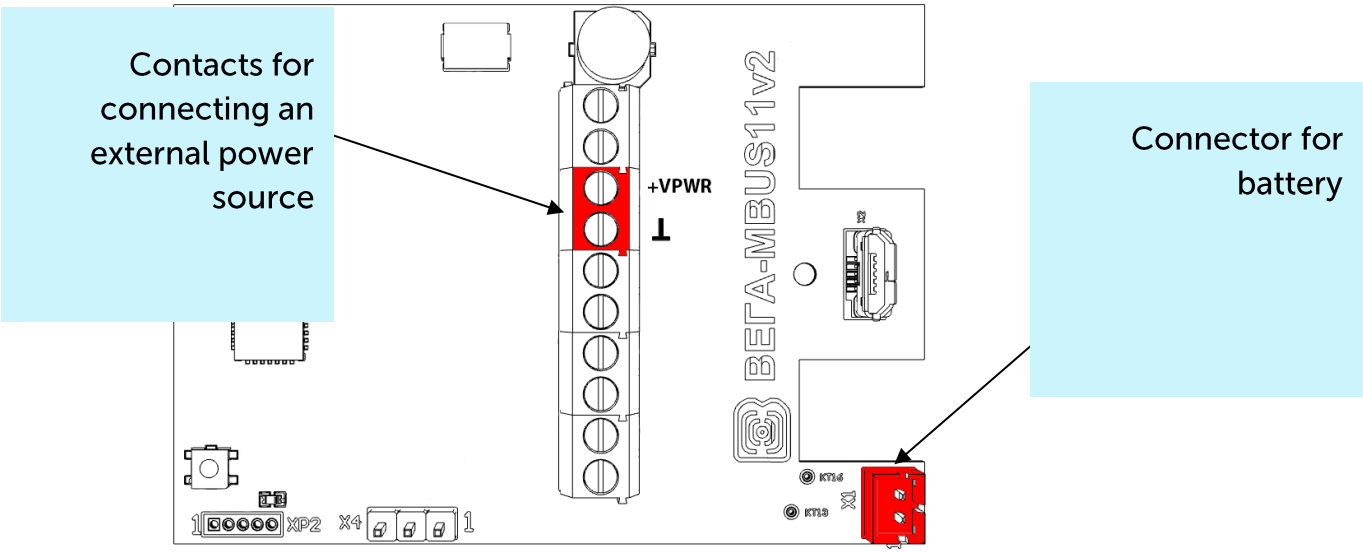

7. When the power is connected at the first time the device automatically switches to the "Active" mode and starts registration in the network. But if the device with connected battery or an external power has been switched to the "Storage" mode (by the pressing on the start button more than 5 sec) then you need to press the button to start.

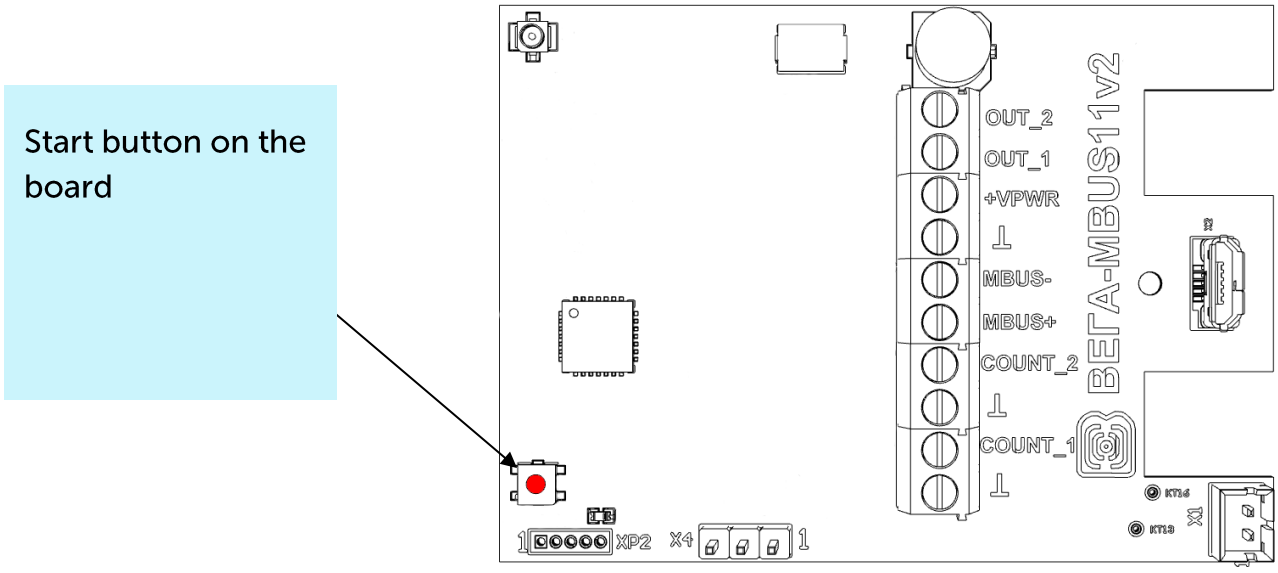

8. By the laptop make sure that the device successfully sends the data.
9. Assembling the device.
10. DIN-rail mounting or another available way to mount the device on the object.

Before connecting the device to the network, make sure that its registration data is entered in the network - Device EUI, Application EUI and Application Key for OTAA, or Device address, Application session key and Network session key for ABP

CONVERTER OPERATION IN THE INDEPENDENT POLL MODE

In the independent poll mode, the converter periodically and consistently polls the metering devices at their secondary addresses. The addresses of the polling devices are written to the converter using the "Vega LoRaWAN Configurator" application.

M-BUS-1 uses the secondary addresses for poll of the connected devices. The secondary address usually is equal to meter serial number.

In case of a successful poll, the data transferred by the metering device is accumulated in the configurator memory and sent to the LoRaWAN® network in accordance with communication period. The communication period can be set to 1, 6, 12 or 24 hours in the "Vega LoRaWAN Configurator" application while converter connected to a computer.

CONVERTER OPERATION IN THE TRANSPARENT MODE

For enable using converter in conjunction with various software systems dispatching of meters and industrial equipment, there is added ability to work in a transparent mode. In this mode, the converter operates as a simple communication channel between the LoRaWAN® network and connected external device. M-BUS-1 can receive data from the LoRaWAN® network for external devices and transfer them to the M-BUS interface without any processing.

If the external device responds to the request, the converter sends the received data back to the network, also without processing, as one or more packets.

Thus, in transparent mode, the converter does not form a request and does not process the response from the metering device. The duty to form requests and analyze the responses lies entirely on the external application that works with M-BUS-1 through the LoRaWAN® network.

The converter must be powered by the external power supply while operating in the transparent mode (operate as a class C LoRaWAN® device).

CONVERTER OPERATION IN THE UNIVERSAL POLL MODE

To reduce the volume of data transmitted over the air, the user can use the universal polling mode. In this mode, the converter independently interrogates metering devices with user-specified commands in accordance with a customizable schedule. This reduces radio traffic and significantly increases the polling rate of the meter.

When operating in the universal polling mode, the converter can operate both on battery power and from an external power source (operate as a class C device).

By default, the universal polling mode is disabled, you can activate it using the Vega LoRaWAN Configurator program on the device tab[1].

Activation of the universal poll mode leads to the blocking of independent polling of supported metering devices

When the "Universal poll" mode is activated, the configurator hides the menu for working with supported metering devices and displays the menu for entering user commands instead.

The user can set up to 10 polling commands (in hexadecimal form), as well as the sequence of their transmissions, intervals, timeouts for waiting for a response. The response of the meter is placed in a "black box" and broadcast in accordance with the period of data transmission.

For a user to be able to remove unnecessary data from the package and transfer only useful data, there is an ability to prohibit a response to a command by unchecking the "Send response" parameter.

Prohibiting the answer is made to increase the polling speed and reduce the amount of data transmitted by the device. When working with M-BUS, payload data can come in response to the second or third commands. The first one or two commands can be initialization commands, to which responses are received in the form of a confirmation receipt.

[1] The described functionality is supported in the Configurator version 1.0.55 and higher.

Data received in the universal poll mode is transmitted in a format which similar to the transparent mode - LoRaWAN® port 2, packet type 3 (see packet 2 of part 4).

Example.

Polling the Sharky 775 heat meter using the universal poll mode:

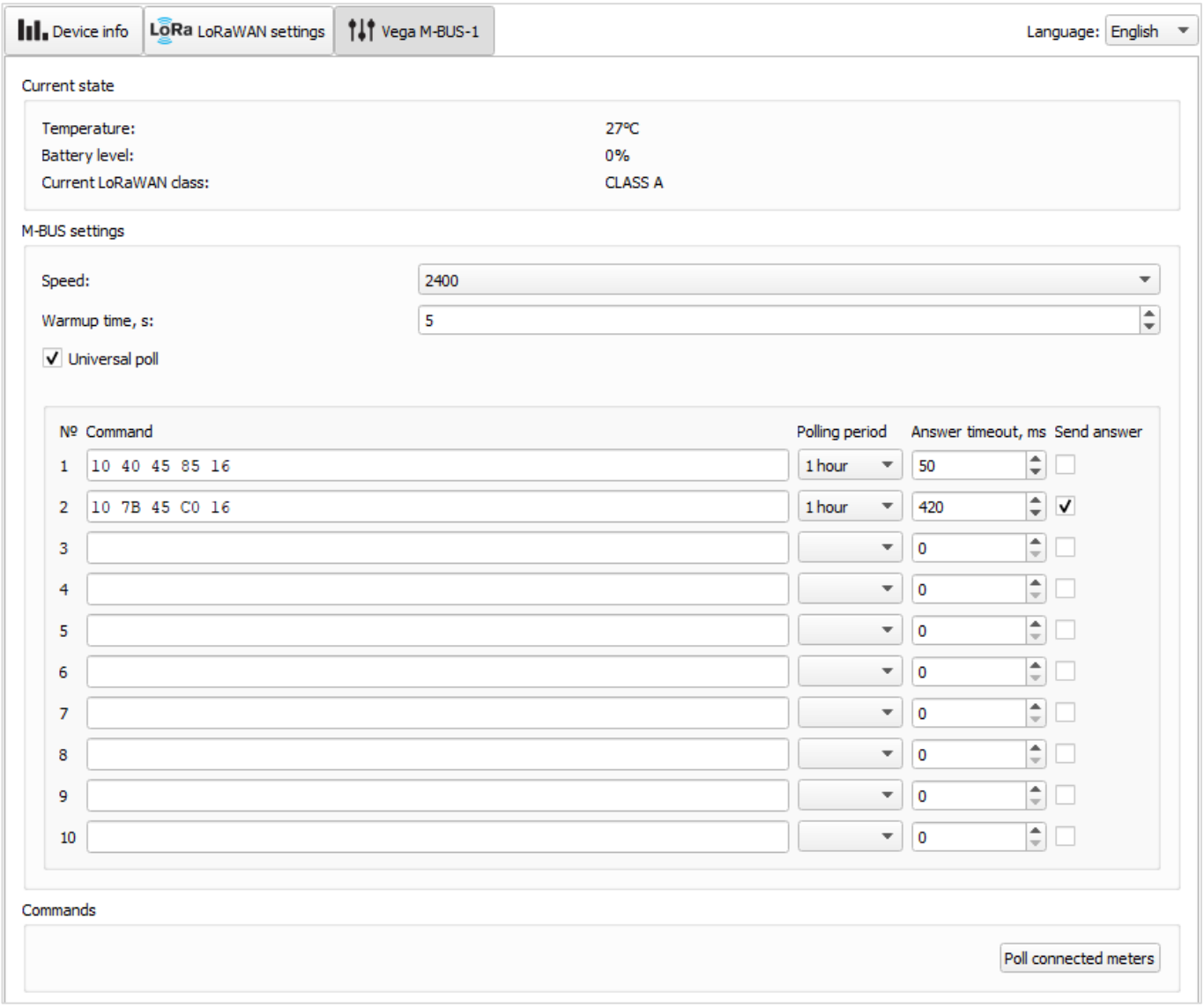

To poll the metering device, two commands are set:

- 0x10 0x40 0x45 0x85 0x16 – initialization command, the meter responds to it with a confirmation receipt 0xE5;
- 0x10 0x7B 0x45 0xC0 0x16 – data request command, the meter responds to it with a packet with readings.

The transmission intervals are set - 1 hour and only the second command response is set.

With this configuration, the work will proceed as follows: every hour, two commands will be transmitted one after the other. Only the second command will be sent to the server via the radio channel, so the confirmation receipt 0xE5 will not be sent.

In the logs of the configurator, this procedure will look like this:

Time to warm-up meters 1621907648

Send user m-bus command:

Received data: E5

Poll meter OK

Send user m-bus command:

Received data: 68 54 54 68 08 45 ...

Poll meter OK

Here Received Data: E5 – is confirmation receipt for the first command.

Here Received Data: 68 54 54 68 ... – is payload response of the meter to the second command. Only this packet will be broadcast, the E5 receipt will be ignored.

4 COMMUNICATION PROTOCOL – 1.1 VERSION

This part describes the M-BUS-1 data exchange protocol with LoRaWAN® network.

In fields consisting of several bytes, the little-endian byte order is used

CONVERTER M-BUS-1 TRANSMITS THE FOLLOWING TYPES OF PACKETS

1. Packet with current readings from connected heat meter

   Sent regularly or by request on LoRaWAN® port 2.

Size in bytes	Field description	Data type
1 byte	Packet type, this packet == 1	uint8
1 byte	Battery level, %	uint8
1 byte	Values of basic settings (bit field)	uint8
4 bytes	Meter secondary address	uint32
4 bytes	Time of readings in this packet (unixtime UTC), by the internal clock of the converter	uint32
4 bytes	The amount of thermal energy consumed, Wh	uint32
4 bytes	Total volume of coolant, l	uint32
4 bytes	Operating time, h	uint32
2 bytes	Current flow temperature ^{0}C*100	uint16
2 bytes	Current temperature in the return line ^{0}C*100	uint16
2 bytes	Current flow of coolant, l/h	uint16
4 bytes	Current flow of coolant, l/h	uint32
4 bytes	Power, W	uint32
1 byte	Environment (water, heat, gas, etc.)[2]	uint8
1 byte	Status[3]	uint8

The converter has internal clock and calendar; time and date are factory set. When sending a packet with the current readings, the device uses the data taken at the nearest time, which is multiple to the interval, set by the switches:

- 1 hour period: the readings of the beginning of the current hour are sent;
- 6 hours period: 00:00, 06:00, 12:00, 18:00 readings are sent;
- 12 hours period: 00:00, 12:00 readings are sent;
- 24 hours period: the readings of 00:00 of the current day are sent.

When transmitting on request the readings are taken in that moment.

[2] Field 'Environment' encoded according to the protocol MBUS (protocol chapter 8.4.1 Measured Medium Variable Structure)
[3] This field appeared in firmware starting from version 2.10. For an explanation of the field, please see the section 6.2 Fixed Data Structure of the official description of the MBUS protocol

A package of this type is transmitted separately for each connected meter. For example, if 5 metering devices are connected to the converter, 5 packets will be transferred to the next connection.

"Values of basic settings" bit field decoding

Bits	Value
0 bit	Activation type 0 - OTAA, 1 – ABP
1st bit	Query for packet confirmation 0 – off, 1 – on
2d,3d,4th bit	Communication period: |1 == 0|2==0|3==0| - 5 minutes |1 == 1|2==0|3==0| - 15 minutes |1 == 0|2==1|3==0|- 30 minutes |1 == 1|2==1 |3==0|- 1 hour |1 == 0|2==0|3==1|- 6 hours |1 == 1|2==0|3==1|- 12 hours |1 == 0|2==1|3==1|- 24 hours
5th bit	Input type – security (1 for that device)
6th bit	Input type – security (1 for that device)
7th bit	Reserve (always 0)

2. Packet with data from connected M-BUS device

Data is transmitted to LoRaWAN® port 2, transparent mode, universal poll mode.

Size in bytes	Field description	Data type
1 byte	Packet type, this packet == 3	uint8
2 bytes	Total size of the received data by the interface	uint16
1 byte	Size of that packet	uint8
1 byte	That packet serial number	uint8
1 byte	Total number of packets	uint8
array	Data	uint8

LoRa data transmission technology imposes restrictions on the maximum packet size, depending on the speed at which the given packet is transmitted. If the data received through the external interface cannot be transmitted in one packet, they are split into several packets, which are transmitted sequentially.

3. Packet with data about external power

Sent in case of change external power status on LoRaWAN® port 2.

Size in bytes	Field description	Data type
1 byte	Packet type, this packet == 4	uint8
1 byte	Battery charge, %	uint8
1 byte	Values of basic settings (bit field)	uint8
1 byte	External power state (0 – off, 1 - on)	uint8

4. «Alarm» packet

Sent when security input is closed on LoRaWAN® port 2.

Size in bytes	Field description	Data type
1 byte	Packet type, this packet == 5	uint8
1 byte	Battery charge, %	uint8
1 byte	Values of basic settings (bit field)	uint8
1 byte	Input number on which "Alarm" is noticed (1 or 2)	uint8
1 byte	Input 1 state («0» - unlocking, «1» - closure)	uint8
1 byte	Input 2 state («0» - unlocking, «1» - closure)	uint8

5. Packet with data about state changes of the outputs OUT_1 or OUT_2

Data sent on LoRaWAN® port 2.

Size in bytes	Field description	Data type
1 byte	Packet type, this packet == 6	uint8
1 byte	Battery charge, %	uint8
1 byte	Values of basic settings (bit field)	uint8
1 byte	Output number on which change is noticed (1 или 2)	uint8
1 byte	Output state («0» - off, «1» - on)	uint8

6. Packet with time correction request

Sent every seven days on LoRaWAN® port 4.

Size in bytes	Field description	Data type
1 byte	Packet type, this packet == 255	uint8
4 bytes	Time of the modem at moment of the packet transmission (unixtime UTC)	uint32

After receiving this type of package, the application can send to modem the packet with time correction.

7. Settings packet

Sent on LoRaWAN® port 3.

Size in bytes	Field description	Data type
1 byte	Packet type, this packet == 0	uint8
2 bytes	ID of parameter	uint16
1 byte	Data length (len)	uint8
len bytes	Parameter value	-----
2 bytes	ID of parameter	uint16
1 byte	Data length (len)	uint8
len bytes	Parameter value	-----
...	...	...
2 bytes	ID of parameter	uint16

1 byte	Data length (len)	uint8
len bytes	Parameter value	-----

CONVERTER M-BUS-1 RECEIVES PACKETS OF THE FOLLOWING TYPES

1. Real-time clock adjustment

Sent by application on LoRaWAN® port 4.

Size in bytes	Field description	Data type
1 byte	Packet type, this packet == 255	uint8
8 bytes	The value in seconds for which you need to adjust the time. Can be positive or negative	int64

2. Query of readings log

Sent by application on LoRaWAN® port 2.

Size in bytes	Field description	Data type
1 byte	Packet type, this packet == 2	uint8
1 byte	Type of request ("0" - interrogate all connected meters, "1" - interrogate the meter by serial number)	uint8
4 bytes	Serial number of the meter	uint32

Upon receiving this package, the converter will perform an extraordinary polling of all connected meters (request type = 0) and alternately send packets with current readings for each of them or interrogate only one device by serial number (request type = 1).

Example 1:

0200 – command to poll all connected devices (no address field).

Example 2:

020000000000 – command to poll all connected devices (address field 0x00)

Example 3:

Poll the counter by the address with the number 17212760 (number in decimal format). The command is **020158A50601**, where 0x58A50601 is the number 17212760 in hexadecimal with little endian byte order.

3. Output on command

Sent by application on LoRaWAN® port 2.

Size in bytes	Field description	Data type
1 byte	Packet type, this packet == 3	uint8
1 byte	Output no. (1 - 2)	uint8
1 byte	Output on time in seconds (1 – 255, 0 – forever on).	uint8

4. Converter operation in transparent mode

Commands sent by application on LoRaWAN® port 2.

Size in bytes	Field description	Data type
1 byte	Packet type, this packet == 4	uint8
array	Data	uint8

Upon receiving this packet, M-BUS-1 will transfer the data contained in it to the M-BUS interface (depending on the model). If the external device connected via M-BUS interface answers within the timeout specified in the M-BUS-1 settings, the response will be transferred to the LoRaWAN® network as one or more type 3 packets.

When using the on/off commands of the outputs and working in transparent mode, the converter must power by an external power source (operate as a class C device)

The LoRa data transfer technology places restrictions on the maximum packet size, depending on the data rate at which the packet is transmitted. In this regard, the packet size sent to the device should not exceed 51 bytes. If you want to send a larger packet, the external application must make sure that the network server is running at the current data rate at which the device is running, allowing you to send larger packets. The table below shows the maximum package sizes for different data rates.

Data rate	Spread factor	Maximum packet size
DR0	SF12	51 bytes
DR1	SF11	51 bytes
DR2	SF10	51 bytes
DR3	SF9	115 bytes
DR4	SF8	222 bytes
DR5	SF7	222 bytes

5. Output off command

Sent by application on LoRaWAN® port 2.

Size in bytes	Field description	Data type
1 byte	Packet type, this packet == 5	uint8
1 byte	Output no. (1 - 2)	uint8

6. Packet with request of settings

Sent by application on LoRaWAN® port 3

Size in bytes	Field description	Data type
1 byte	Packet type, this packet == 1	uint8

Answering that packet, the device sent the packet with settings.

7. Packet with settings is identical to such packet from device

Size in bytes	Field description	Data type
1 byte	Packet type, this packet == 0	uint8
2 bytes	ID of parameter	uint16
1 byte	Data length (len)	uint8
len bytes	Parameter value	-----
2 bytes	ID of parameter	uint16
1 byte	Data length (len)	uint8
len bytes	Parameter value	-----
...	...	...
2 bytes	ID of parameter	uint16
1 byte	Data length (len)	uint8
len bytes	Parameter value	-----

The package with settings sent to the device may not contain all the settings supported by the device, but only the part that needs to be changed.

Table of ID of M-BUS-1 parameters and these possible values

ID of parameter	Description	Data length	Possible values
4	Confirmed uplinks	1 byte	1 – confirmed 2 – unconfirmed
5	ADR (Adaptive Data Rate)	1 байт	1 – enabled 2 – disabled
8	Uplinks number of transmissions	1 byte	from 1 to 15
16	Communication period	1 byte	1 – 1 hour 2 – 6 hours 3 – 12 hours 4 – 24 hours 5 – 5 minutes 6 – 15 minutes 7 – 30 minutes
32	MBUS interface speed	1 byte	1 – 300 2 – 600 3 – 1200 4 – 2400 5 – 4800 6 – 9600 7 – 19200 8 - 38400
33	External M-BUS device type	1 byte	0 – device type not set

			1 – Teplouchet-1 2 – STE 21 «Berill 3 – Danfoss Sonometer_500 4 – ELF_M 5 – Weser 6 – MULTICAL_801 7 – MULTICAL_402 8 – LANDIS_GYR_COMMON 9 – SHARKY_775 10 – PULSAR 11 – SONOSAFE_10 12 – CALEC_ST_II 13 – ABB 14 – SENSONIC_II 15 – CALEC_ST_II_2 16 – ZENNER_MULTIDATA_WR3 17 – PULSE_STK_15 18 – HITERM PUTM-1
49	Data collection period	1 byte	1 – 1 hour 2 – 6 hours 3 – 12 hours 4 – 24 hours 5 – 5 minutes 6 – 15 minutes 7 – 30 minutes
55	Time zone, in minutes	2 bytes	from -720 to 840

5 IMPORTANT SAFETY INSTRUCTIONS

GENERAL RECOMMENDATIONS

Before you start working with the Vega M-BUS-1 device, you must read this User Manual (hereinafter — Manual).

This device is designed to collect readings from devices with an M-BUS interface, with subsequent accumulation and transmission of this information to the LoRaWAN® network. Using the device for purposes other than those specified in this manual is a violation of the rules of operation. The manufacturer is not responsible for any damage resulting from the use of the device for other purposes. The operation of the Vega M-BUS-1 device must be carried out by an instructed person (GOST IEC 62368-1).

Not intended for use by children or in areas where children may be present

It is forbidden to repair the device independently or to make changes to its construction, as well as install any firmware other than firmware supplied by the manufacturer

Unprofessional repair work or third-party firmware installation may result in the device failure, personal injury, or property damage.

The manufacturer is not responsible for unpredictable consequences arising from the use of third-party firmware on the device

ELECTRICAL SAFETY

Do not use the device near open flames and direct sunlight - this may lead to overheating and fire. The device must be used in ambient temperatures between -40°C (-40 F) and +85°C (185 F)

If a fire is detected, stop using the device immediately. When using external power, the device must be disconnected from the power source. When using a rechargeable battery as a power source, it is necessary to eliminate the fire and disconnect the battery from the device (remove the battery or cut the wire leading to the battery). After that, the device and the battery must be sent to the manufacturer for diagnostics (for manufacturer's contacts please see chapter «Warranty»).

During operation, it is necessary to prevent foreign objects from entering the device case, this can lead to a short circuit and fire. Do not operate devices with an open or damaged housing.

Accidental damage to the power cable may result in electric shock or malfunctions which are not covered by the warranty.

It is forbidden to immerse the case of the device in water, it is not recommended to place it under water jets.

Do not touch the wires, circuit boards, or device case with wet hands

Do not use the device if there is water inside. Doing so may result in injury or damage to the device and cause it to malfunction. In such cases, please contact the manufacturer's technical support.

BATTERY SAFETY INSTRUCTIONS

This device uses built-in batteries type ER 18505M 6400 mAh 3.6V. Do not use other types of batteries

When installing the battery, the polarity must be observed.

To power the device, you must use only the original batteries which are included in the package. If the battery fails, you must purchase a new one from the manufacturer of the device. Otherwise, the device manufacturer does not guarantee correct operation of the device.

The battery must not be used in extremely low air pressure environments, which may result in an explosion or leakage of flammable substances.

The device is not suitable for operation in conditions of extremely low air pressure (at altitudes above 2000 m).

The battery must not be heated and/or exposed to an open flame and/or placed near an open flame and/or deformed.

The battery included with the device contains lithium.

Do not open or attempt to recharge the battery as this may result in an explosion, fire, or leakage of flammable substances

If a battery ignites, do not inhale combustion products, and do not touch the battery with unprotected hands. This may result in chemical burns.

If battery electrolyte gets into your eyes, immediately rinse your eyes with plenty of clean water and seek for medical attention as soon as possible.

SAFETY INSTRUCTIONS IN CASE OF DAMAGED HOUSING

During normal operation of the device, the case of the device does not pose a danger. Mechanical damage to the case may result in sharp edges and corners that are potentially hazardous to the user. In this case, you must stop using the device and send it to the manufacturer for a case replacement.

When installed in accordance with this manual, the equipment does not pose a hazard to humans.

EMISSION INFORMATION

With proper operation and following the recommendations for installation, the device does not have a harmful effect on the human body and electrical equipment.

SOLVING COMMON PROBLEMS

If smoke, fire, sparking, abnormal heating, functional errors occur, or water gets inside the case, the device must be de-energized by disconnecting and / or removing the battery and it is necessary to contact the manufacturer's technical support.

6 STORAGE AND TRANSPORTATION REQUIREMENTS

The M-BUS-1 converter shall be stored in the original packaging in heated room at temperatures +5 °C to +40 °C and relative humidity less than 85%.

The converter shall be transported in covered freight compartments of all types at any distance at temperatures -40 °C to +85 °C.

7 CONTENT OF THE PACKAGE

The M-BUS-1 device is delivered complete with:

Converter M-BUS-1 (with 2 screws in the case) – 1 pc.

Antenna LoRa – 1 pc.

Screw 3x16 – 4 pcs.

Factory certificate – 1 pc.

8 WARRANTY

The manufacturer guarantees that the product complies with the current technical documentation, subject to the storage, transportation and operation conditions specified in the "User Manual".

The warranty period is 36 months if the number of data packets sent by the product is up to 10,000.

The warranty period of operation is calculated from the date of sale marked in the product factory certificate, and from the release date when such a mark is absent. During the warranty period, the manufacturer is obliged to provide repair services or replace a failed device or its components.

The manufacturer does not bear warranty obligations in the event of a product failure if:

- the product does not have a factory certificate;
- the factory certificate does not have an TCD stamp and / or there is no sticker with information about the device;
- the serial number (DevEUI, EMEI) printed on the product differs from the serial number (DevEUI, EMEI) specified in the factory certificate;
- the product has been subject to alterations in the design and / or software which are not provided for in the operational documentation;
- the product has mechanical, electrical and / or other damage and defects arising from violation of the conditions of transportation, storage and operation;
- the product has traces of repair outside the manufacturer's service center;
- the components of the product have internal damage caused by the ingress of foreign objects / liquids and / or natural disasters (flood, fire, etc.).

The average service life of the product is 7 years.

In the event of a warranty claim, contact the service center:

119A, Bol'shevistskaya Str., Novosibirsk, 630009, Russia.

Tel.: +7 (383) 206-41-35.

e-mail: remont@vega-absolute.ru

DOCUMENT INFORMATION	
Title	M-BUS-1 LoRaWAN device
Document type	Manual - Translation from Russian
Document number	V02-MBUS1-01
Revision and date	17 of 21 December 2021

Revision History

Revision	Date	Name	Comments
01	29.08.2017	KEV	Document creation date
02	05.10.2017	TII	Minor changes
03	26.10.2017	KEV	External devices connection was added
04	30.10.2017	TII	Work in transparent mode, exchange protocol edits, part "Contacts" is expanded
05	05.04.2018	TII	Supported connected devices list, the number of warranty packages has changed, minor changes
06	10.08.2018	KEV	Changes in the device logic, frequency plans are added, changes in the communication protocol, in technical characteristics, new supported meters are added
07	02.11.2018	KEV	Typo about battery capacity in the specification is fixed, new supported heat meter is added
08	22.01.2019	KEV	Changes in the communication protocol, in specification, settings by the air described, added "Marking" part and "Indication" part
09	24.01.2019	KEV	Inaccuracy in communication protocol fixed – packet type for packets with settings and request of settings
10	27.05.2019	KEV	Settings changed (page 32): settings 12 and 13 deleted, and a 32 added
11	01.07.2019	KEV	Added data transfer periods 5, 15 and 30 minutes, Device AppEui changed
12	27.02.2020	KEV	Typo on the page 11
13	03.11.2020	KEV	Device AppEui is removed from the characteristics, the LANDIS_GYR counter is not supported in the new firmware, examples for package 2 in the communication protocol are added, the configurator screenshots are updated, other planned changes
14	02.02.2021	KEV	The number of warranty packets is changed

15	30.06.2021	KEV	The list of supported metering devices has been changed, the size of the black box has been increased, new functionality has been added, new warranty conditions, the exchange protocol (packet 1) has been changed, scheduled revision of documentation, new parts
16	15.10.2021	KMA	Minor changes, address
17	21.12.2021	KMA	New chapter «Important safety instructions »

vega-absolute.ru

User Manual © OOO Vega-Absolute 2017-2021